DRIFT 3D (ULTRA 3D)
SERVICE MANUAL

Contents

I Product Components: 1

1. RK2003F STRUCTURE DIAGRAM 2

2. KEY PARTS 3

II Common Faults and Troubleshooting Methods 4

1. Massage chair inoperable, remote controller no display 5

2. Bluetooth Abnormal 5

3. Acuator not working 6

4. Footroller not working 7

5. Airpressure abnormal 7

6. Mechanism Up&Down movement abnormal 8

7. Kneading abnormal 10

8. Tapping abnormal 11

9. Mechanism Forward Abnormal 12

10. Shoulder Height Detection Abnormal 13

11. Waist Heat not Working 13

12. Remote dispaly abnormal 14

13. Remote Abnormal 14

III Mechanical Failures and Solutions 14

1. Remove footrest Assembly 15

2. Remove Back Shell 15

3. Remove Armrest Assembly 16

4. Remove Mechanism Assembly 18

5. Remove Air Pump 17

6. Replace megnetic valve 18

7. Replace Actuator 19

IV. Main PCB component layout diagram 21

V. System Connection Diagram 22

I Product Components

1.RK2003F Structure

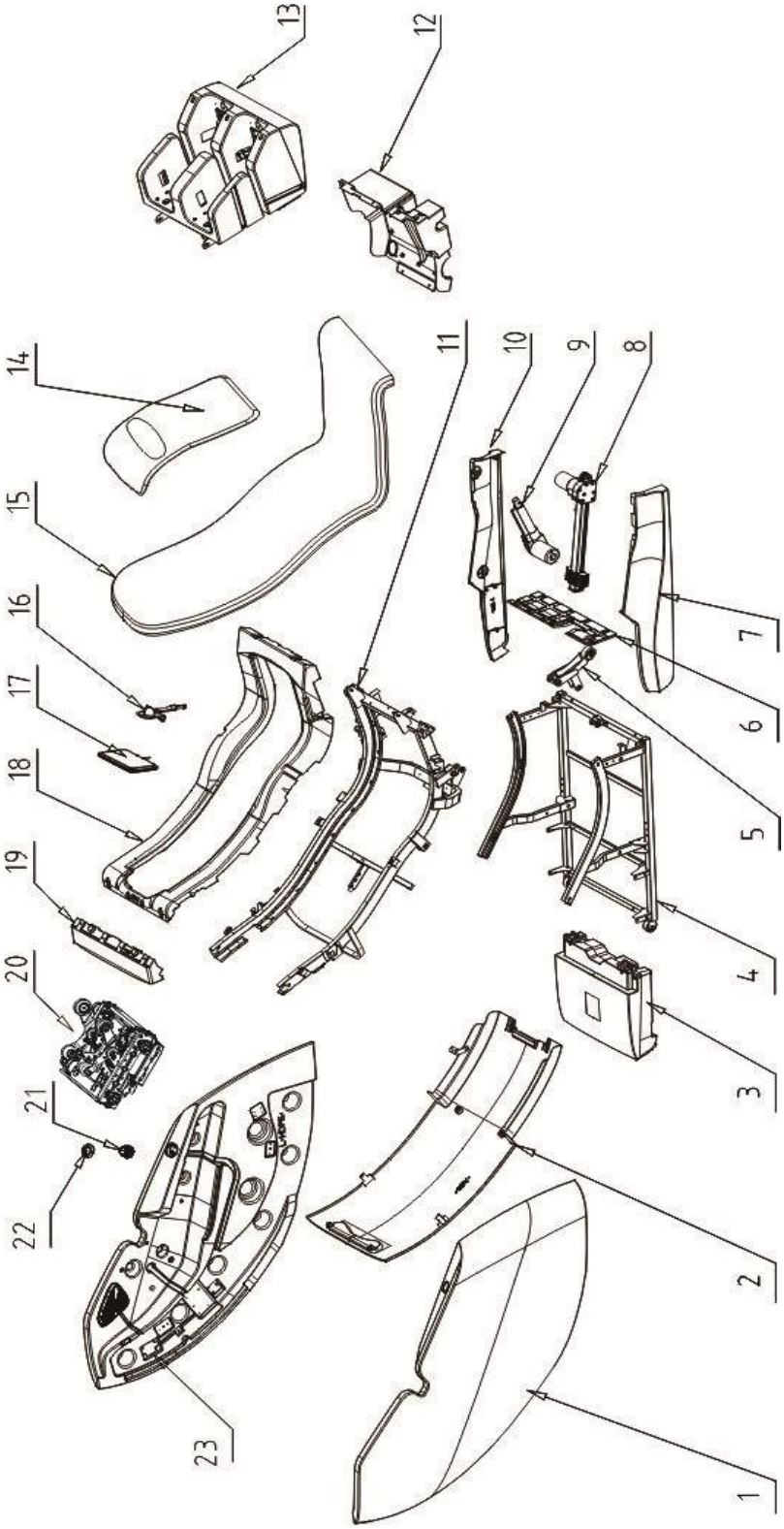

Components List

S.N	Item	Qty	S.N	Item	Qty
1	Right Armrest	1	13	Footrest assembly	1
2	Back Cover	1	14	Head Cushion	1
3	Power Box	1	15	Back Cushion	1
4	Base Frame	1	16	Remote support	1
5	Foot Leg Connector	1	17	Remote	1
6	Front Panel	1	18	Back Bottom Structure	1
7	Right Panel	1	19	Back Up structure	1
8	Actuator	1	20	Roller mechanism	1
9	Electric Actuator	1	21	Rotate Button	1
10	Left panel	1	22	Button Decoration	1
11	Back Frame	1	23	Right Armrest	1
12	Back bottom cover	1			

2.Key Parts

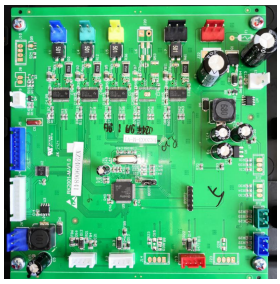

PCB

Power Switch

Remote

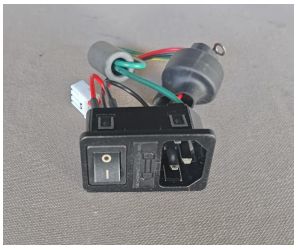

3 in 1 Switch

Air Pump

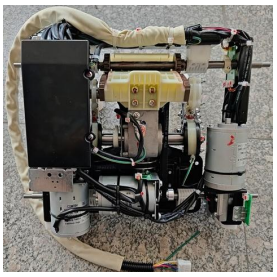

Mechanism

Back Actuator

Leg Actuator

Bluetooth Board

Rotate Button

Horm

II. Common Faults and Troubleshooting Methods

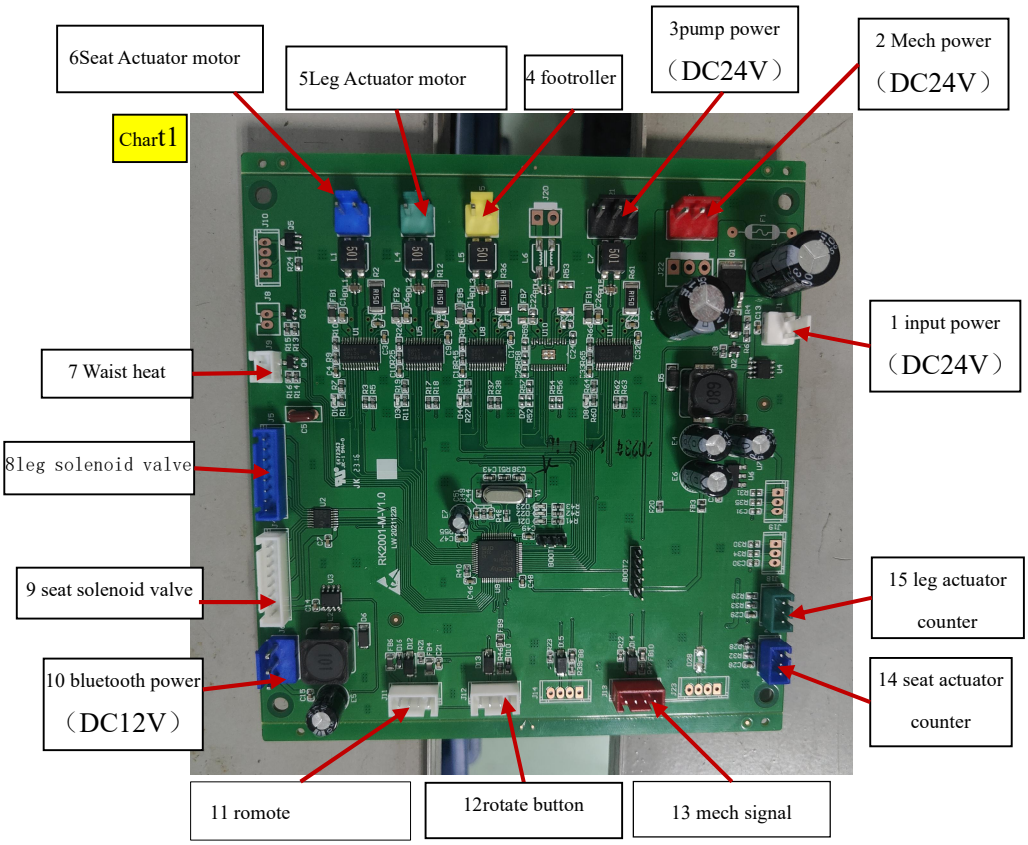

System Connection Chart

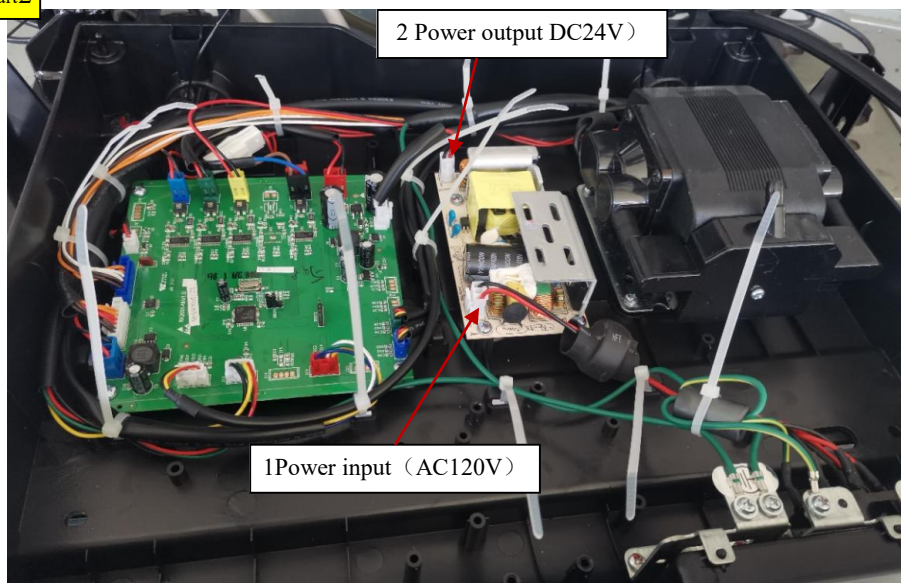

Power Box Connection

1. Massage chair inoperable, remote controller no display

1.1 First, check if the socket has power. Turn on the 3-in-1 switch base. Check if the fuse of the 3-in-1 switch (marked as 1 in the diagram) is blown. If the fuse is blown, replace it and the device should work normally.

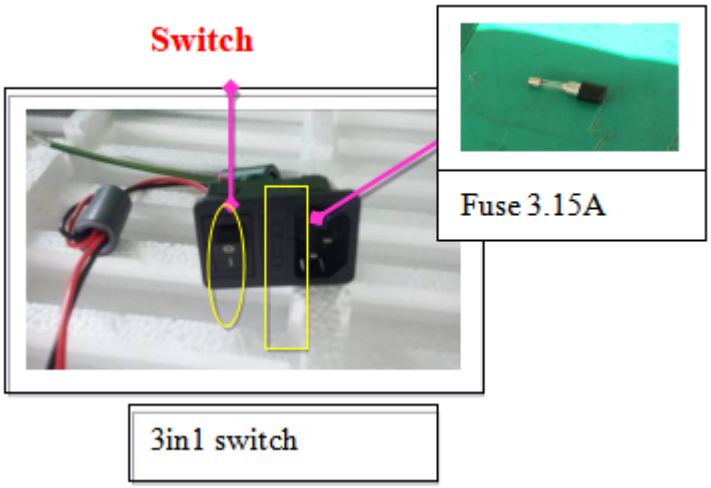

1.2 Measure voltage at point 1 (switching power supply board connector) and point 2 (voltage output) in Figure 2. If there is AC 120V at point 1 but no DC 24V output at point 2, the switching power supply board is faulty.If there is voltage output, use the multimeter's DC voltage function to check whether the voltage at point 1 (main board connector, DC 24V) in Figure 1 is normal. If there is no voltage, replace the connection between the switching power supply board and the main board.

1.3 Check whether remote is securely connected to the main board connector. If the connection is secure, measure the DC5V voltage at both ends of the 11-pin connector in Figure 1. If voltage is present, replace the remote assembly. If no voltage is detected, the main board is damaged and should be replaced.

2 Speaker Abnormal

2.1Set the multimeter to the DC voltage mode to measure the voltage across the connector (Pin 1 negative, Pin 3 positive) of the Bluetooth board in Figure 3. If the voltage is normal at 12V and the Bluetooth board has power but the red and blue LEDs still flash without playing music properly, the speaker is faulty and should be replaced.

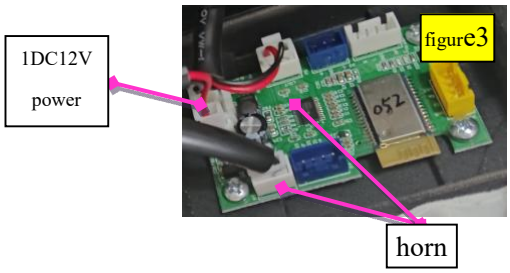

2.2 If the Bluetooth board does not have

DC12V voltage, measure whether connector 10 in the main board in Figure 1 has DC12V voltage output. If there is output, replace the connecting harness between the two circuit boards. If there is no output, replace main board.

3 Actuator Abnormal

3.1 Determine whether main board is damaged or actuator is damaged.
3.1.1 Swap non working actuator plug with another actuator plug (led out from the main board), and if it still does not work after swapping, it proves that actuator is damaged.
3.1.2 After replacement, actuator can work, which proves that the main board is damaged. Replacing main board can solve the problem.
3.2 How to judge the quality of actuator
3.2.1 Place the multimeter in DC voltage mode, insert the two probes into the pole connector terminals, operate the backrest up and down button, and check if the multimeter has a 24V output or not. If yes,replace actuator. If not, replace main board.
3.2.2 If the actuator is at the upper or lower limit, use a multimeter to measure the plug-in line. The values between the two wires of actuator should be interchanged with red and black probes. If the value of unidirectional conduction of the diode is measured (around 0.5), there is no problem with actuator. Otherwise, the actuator is damaged. If actuator is not in the two extreme positions, use a resistance gear to measure the plug-in wire. If there is no resistance or the resistance between the two wires of the pole is too high, it proves that the actuator motor has an open circuit (normally around 5-30 ohms). Replacing the actuator can solve the problem.

4 Footroller not working

4.1.Turn on foot roller function, set multimeter in 200V DC voltage range, and measure the voltage at point 4 (yellow) in Figure 1 with two probes to see if it is 24V. If there is no 24V output, the main board is broken. If there is voltage output, check if the docking connector is securely plugged in. If there is no problem, it is usually due to a broken roller motor, which shall be replaced.

5 Air Pressure Abnormal

5.1 Air Pump not working

5.1.1 Check if the power cord connecting air pump and main board

connector (3 in Figure 1) are in good condition.

5.1.2 Use a multimeter to measure whether there is AC24V at main board connector (3 in Figure 1). If there is voltage, it indicates that the air pump is faulty and needs to be replaced. If there is no voltage output, the main board is faulty and needs to be replaced.

5.2 After air pump has been working for a period of time, the air pressure decreases:

5.2.1 Check if the air inlet of the air pump is dirty or blocked, and clean the air inlet of the air pump;

5.2.2 Check if the air tube on the air pump is bent or loose, and fix or replace the air tube

5.3 Air pump is functioning properly, but the airbag is not inflating.

Port Correspondence Table (6 solenoid valves in total)

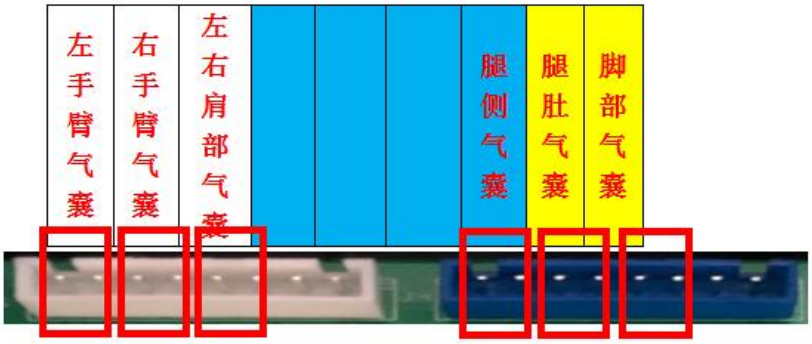

From left to right: left arm airbag, right arm airbag,left/right shoulder air bag, leg side airbag, calf airbag,foot airbag.

5.3.1 Check whether air pipes and solenoid valve have any detachment or loosening, and reinsert them for secure fixation if necessary;

5.3.2 Check whether the drive section of solenoid valve corresponding to the non-inflated airbag is open-circuited or if any components are damaged (as shown in the figure above). If so, replace the main board.

5.3.3 Check whether the solenoid valve is damaged.

Testing method: Set the multimeter to the resistance range and measure if there is a resistance reading (approximately 165Ω). If the displayed resistance is infinite or very low, it indicates a faulty solenoid valve, which can be replaced.

5.3.4 Check whether the solenoid valve port on the main board has a DC24V voltage input. If not, it indicates a faulty main board, which should be replaced.

Mechanism eletcric connection

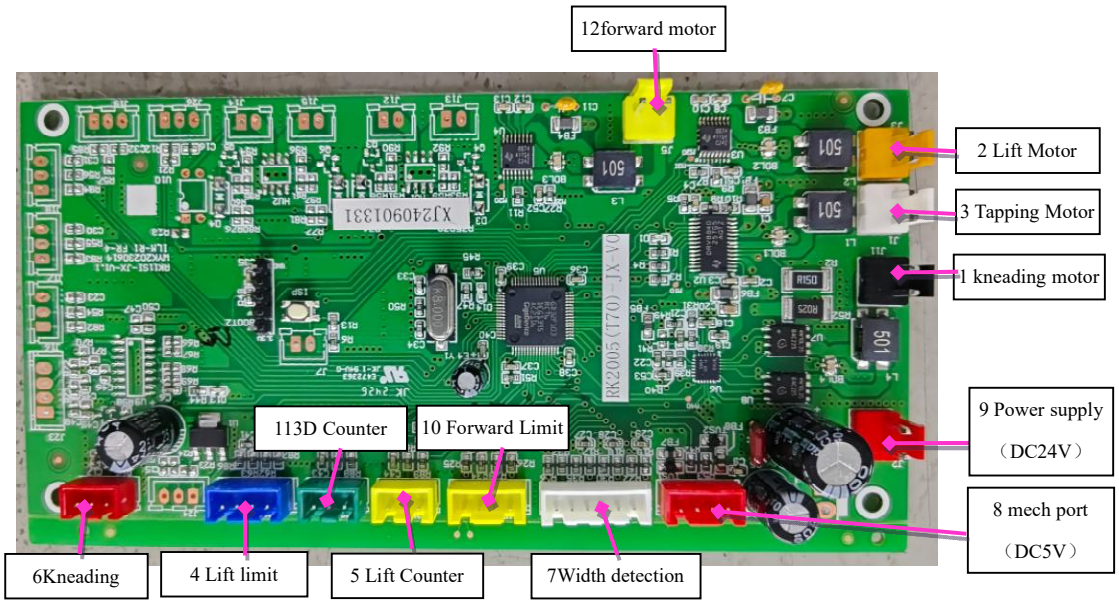

6. Abnormal lifting function of mechanism

6.1 When the massage machine is operating in the up and down mode, the lifting and lowering functions fail to work

6.1.1 Turn on the remote and manually operate the upper mechanism go through the full range. Use a multimeter's DC voltage setting to measure whether there is voltage output (approximately DC24V) at the two connectors on the upper massage machine's main board. If no voltage is detected, the massage machine board is faulty and should be replaced for proper operation

6.1.2 If the voltage is normal, disconnect the connector and use the continuity test function of a multimeter to measure the connectivity of the red and black wires in the 450B three-core white connector between the upper massage roller board and the lifting motor. Check whether the plug-in connector is securely fastened and whether the terminals have good contact. If both wires are connected properly, it indicates that the lifting motor is faulty and needs to be replaced, or the entire roller. If there is any disconnection in the wires, the plug-in wiring harness must be replaced;

6.1.3 To determine whether the lifting motor is damaged, set the multimeter to the resistance range and measure the resistance between both ends of the lifting motor connector. If the resistance is not within 5-30Ω, the motor is damaged.

6.2 When the massage machine is operating in the up-down mode, if an overrun at the top or bottom occurs, it shall be upper and lower limit signal failure

6.2.1Check if the connector at the 4 lifting limit position in the massage machine core board has come off from the connector on the upper and lower limit board in the red box on the right, and if there is any terminal detachment of the connector.

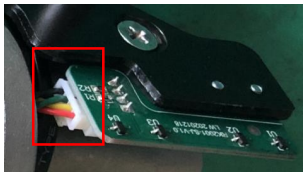

6.2.2 Measure whether there is DC5V at both ends of the red box connector in the right figure. If it is normal, check whether there is a high or low level change in the lifting limit Hall element (use magnetic steel to approach or leave the Hall element, measure the upper or lower limit connector pins 2 and 3 in the red box). If there is no level change in pins 2 and 3, replace the lifting limit board.

6.2.3 Disconnect the connectors at 4 location on the massage roller board and use a multimeter buzzer to measure the continuity of the wiring harness between the massage roller board and the upper and lower limit boards. If both are connected, it indicates that the massage roller board is damaged and can be replaced; If it doesn't work, replace the corresponding lifting limit harness.

6. 3 If the massage machine does not work in a certain area of the shoulder, back or waist, the massage machine run throughout the entire process; There is a signal fault at the 5 lifting and counting points on the massage roller board.

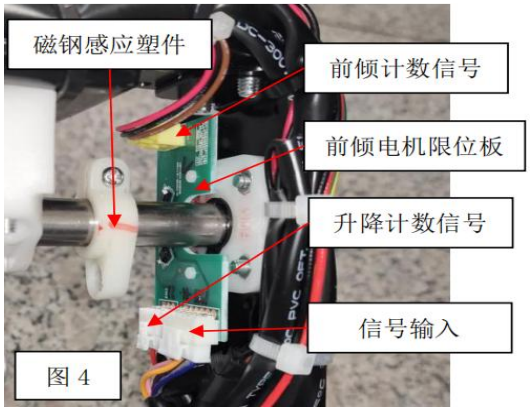

图 4

6.3.1Check if the connector between the massage roller board and forward motor limit board has come loose, and if the terminals have come loose. Pull out the signal input wire on the limit board of the forward motor in Figure 4, and measure the on/off status of the massage roller boards 5, 10, and 11 (red, brown, orange, yellow, blue, and black) corresponding to red, brown, orange, yellow, blue, and black. If they do not work, replace the forward signal harness.

6.3.2 If both are connected, make the massage machine work in the up and down states. Use a multimeter DC voltage range to measure whether there is a DC5V voltage on the red and black wires of the signal input in Figure 4. If not, the massage machine roller board is damaged. If

there is, measure whether there is a high or low level change between the brown and black wires of the lift counting signal. If not, the lift motor counting is damaged, and replace it or the massage machine; During the maintenance process, do not adjust the position of the magnetic steel in the magnetic steel induction plastic part and the Hall element of the forward tilt motor limit board, otherwise it may also cause counting faults in the up and down movement or forward tilt of the movement.

6.4 Start up and enter a program. The massage machine starts to perform shoulder height detection. If the massage machine stops slightly at the upper limit position, it indicates a shoulder height detection fault. Check the lifting motor, replace it, and test the shoulder height function. If it is not normal, replace the massage roller board. Check the shoulder height detection abnormality steps to inspect the lifting motor. If the massage machine cannot detect the shoulder during downward movement, first check if the roller is in the wide position. If it is not in the wide position and the magnet is installed normally, replace the width detection board (follow the steps to check for abnormal tapping, medium width, medium narrow); Check if the forward tilt motor extends normally again. If it does not extend, follow the steps for abnormal operation of the massage machine's forward tilt motor to check the forward tilt function.

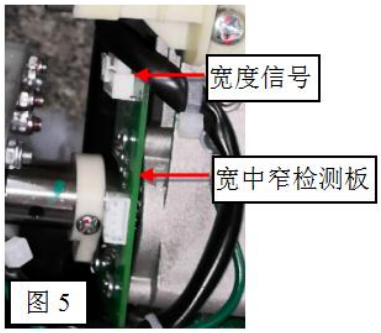

图 5

7. The kneading function is abnormal.

7.1 The massage machine has no kneading action.

7.1.1 Turn on the manual control to give kneading instructions. Use a multimeter with DC voltage range to measure whether there is a voltage output of around DC9-20V at the connector terminals of the kneading motor on the massage roller board. If there is no voltage output, the massage roller board is damaged and shall be replaced.

7.1.2 If there is voltage output, check if the connector of the kneading motor harness is secure and if the terminals are in good contact. If everything is normal, unplug the connector and use a multimeter buzzer to measure the continuity of the red and black wires from connector 1 on the massage roller board to the two ends of the black two core 450B connector. If both are connected, it indicates that the kneading motor is broken and needs to be replaced with a new motor or massage machine; If it doesn't work, the kneading motor harness assembly needs to be replaced; The method for determining whether the kneading motor is

damaged is the same as the method for determining the lifting motor in 6.1.3.

7.2 Once the massage chair is turned on, the kneading function will start running. If it cannot be turned off through manual control, the massage roller board is damaged and shall be replaced.

8. The tapping function of the massage machine is abnormal.

8.1 The massage machine has no tapping action

8.1.1 Turn on the remote to give tapping commands to the massage machine. Use the DC voltage range of the multimeter to measure whether there is a DC9-20V voltage output at both ends of the connector at the tapping motor of the massage roller board 3. If there is no voltage, the massage machine roller board is damaged. After replacement, it returns to normal.

8.1.2 If the voltage of the massage roller board is normal, check whether the mating connector from the massage roller board to the tapping motor is secure and whether the terminals are in good contact. If everything is normal, unplug the connector and use a multimeter buzzer to measure the continuity of the red and black wires from connector 3 of the massage machine board to the white two core 450B connector. If they are all connected, it indicates that the tapping motor is broken and needs to be replaced. If the two wires are not connected, the tapping motor harness assembly needs to be replaced; The method for determining whether the tapping motor is damaged is the same as the method for determining the lifting motor in 6.1.3.

8.2 Once the massage chair is turned on, the tapping function starts running. If it cannot be turned off through manual control, the massage machine board is damaged and needs to be replaced.

8.3 Use remote to operate tapping mode. If the width cannot be selected or are incorrect, the movement's width signal is faulty. Measure the red and black wires of the connector at the 7 wide, medium and narrow signal positions on the massage machine board using a multimeter in DC voltage range to see if there is 5V/DC output. If there is no output, the massage machine board is damaged. If there is voltage output, check if the connector from the massage machine board 7 to the width signal in Figure 5 is securely plugged in and if there is any terminal detachment. If everything is normal, use a multimeter buzzer to measure the on/off status of the width signal end at 7 red, brown, yellow, and black positions as shown in Figure 5. If it doesn't work, replace the wide, medium, and narrow detection signal harness assembly. If both are connected, use a magnet to approach and move

away from the Hall element, and measure whether there is a voltage change between the brown, black, yellow, and black lines. If there is no change, it means that the wide, medium, and narrow detection board is damaged. After replacement, it works normally. Otherwise, replace the massage machine board.

If you choose the width, keep kneading. Use a multimeter in the DC voltage range to measure whether there is a DC5V voltage on the red and black lines at the counting point of massage machine board 6. If not, replace the massage machine board; Measure whether there is a high or low level change between the yellow and black lines. If there is, replace the massage machine board. Use the same method to test whether the voltage between the red, yellow, and black lines of the kneading counting board is normal. If there is no voltage, replace the kneading counting harness; If the voltage is normal, replace the kneading counting board. As shown in the figure on the right.

9. The forward tilt function of the massage machine is abnormal

9.1 The massage machine tilts forward without any movement. Turn on the manual control to give the massage machine a forward tilt command, place the multimeter in the DC voltage range, and measure whether the voltage output at both ends of the connector at the forward tilt motor of the massage machine board 12 is normal. If there is no voltage, the massage machine board is broken. If the voltage is normal, check if the connector between the massage machine board and the forward tilt motor harness is secure and if the terminals are in good contact. Then use a multimeter to measure the continuity of the red and black wires at 12 points on the massage machine board to the black three core 450B connector of the forward tilt motor harness. If they are all connected, it indicates that the forward tilt motor is damaged and the motor or machine needs to be replaced. If it does not work, the forward tilt motor harness assembly needs to be replaced; The method for determining whether the forward motor is damaged is the same as the method for determining the lifting motor in 6.1.3

9.2 The massage machine tilts forward improperly or exceeds its limit. It is forward tilt counting malfunction. There are two types of this situation, one is a malfunction of the forward tilt counting board, which is normal after replacement. One is that the position of the "magnetic steel induction plastic

图 6

part" in Figure 4 has changed. The solution is as follows: 1. As shown in Figure 6, ensure that the gear is fully meshed with the second tooth of the rack. If it is not fully engaged, adjust the forward tilt motor shaft until it is engaged. Align the plastic magnet with the lower Hall element and fix it

9.3 Forward leaning towards the top or bottom. Place the multimeter in the DC voltage range, use a magnet to approach and move away from the Hall element, and measure whether the voltage output between the brown, orange, and black wires of the connector at the forward tilt limit of the massage machine board 10 is normal. If there is voltage, the massage machine board is damaged. If there is no voltage, check whether the wiring harness between the massage core board and the forward tilt limit board is connected normally. If it is connected normally, replace the forward tilt motor limit board; Otherwise, replace the forward tilt signal harness assembly.

10. Abnormal shoulder height detection

10.1 Shoulder height detection: After the lifting motor reaches the top of the backrest, it stops as soon as it moves downwards. This phenomenon is caused by high or fluctuating current in the lifting motor. Connect the DC current range of the multimeter in series with the control circuit of the lifting motor (or clamp the red or black electronic wire with a clamp meter), and measure whether the no-load lifting motor current is between DC0.3-0.45A. If it is too high (above DC0.6A), replace the lifting motor or massage machine. Otherwise, replace the massage machine board.

10.2 Shoulder height detection massage machine stops near the waist. This phenomenon is due to the low current of the lifting motor. Measure the current according to step 10.1. If the current is low when pressing the shoulder, replace the lifting motor or massage machine. Otherwise, replace the massage core board;

11 Waist heating cloth does not work

11.1 Turn on the heating function and measure the voltage at point 7 in Figure 1 to see if it is DC24V; If there is no voltage output, it means the main board is damaged; If there is voltage output, use a multimeter to measure whether the heating wire plug has DC24V. If not, please replace the heating wire; If there is voltage, please replace the heating cloth

12 The screen of the controller is abnormal, and the button operation function is normal

12.1 If the screen display is abnormal and the button operation function is normal, it is generally due to a malfunction of the manual control board display screen. After replacing the remote assembly, it returns to normal.

13 The simple manual controller is abnormal.

13.1 Check if the connectors between the simple manual controller and the main board are securely connected, and if the wiring harness is properly connected. If there is an abnormal connection or disconnection, replace the corresponding wiring harness assembly.
13.2 Use the DC voltage range of the multimeter to measure whether there is a DC5V voltage at both ends of connector 12 in Figure 1. If there is no voltage, the main circuit board is damaged. Otherwise, replace the simple manual controller board.

III Mechanical faults and their solutions

1.Disassembly of leg and foot assembly

1.1 As shown in the figure below, remove the DK gear card, then lift up the legs and feet, unplug the leg and foot connectors and intake pipes, and remove the leg and foot assembly from the massage chair assembly.

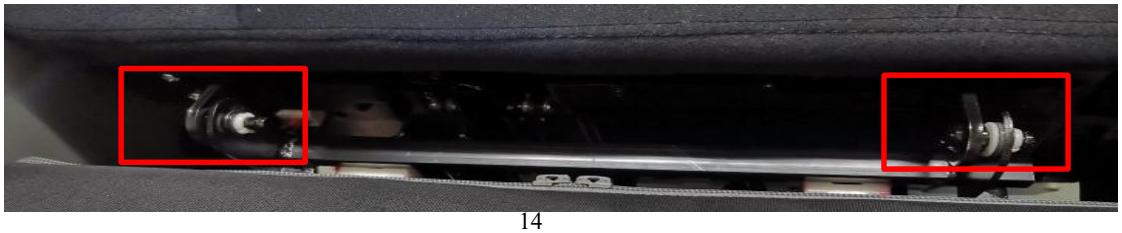

2. Disassemble the rear cover.

2.1As shown in the figure, use an electric tool to remove the screws around the back cover, and use hand force to remove the back cover.

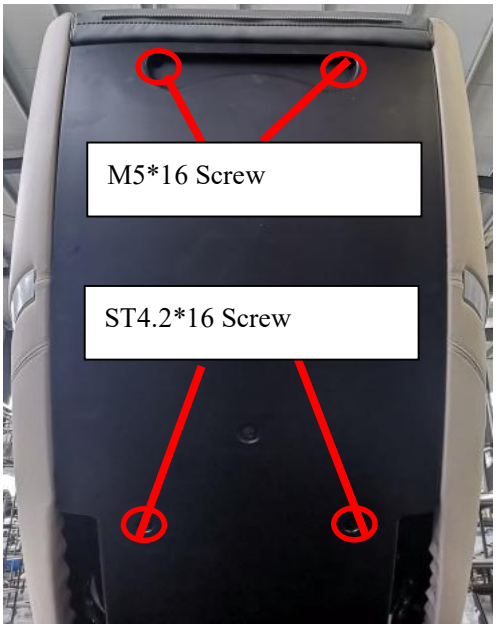

3. If the components inside the armrest are damaged, remove the armrest assembly.

3.1 As shown in the figure, disconnect the left and right armrests from the Chair connector, and then remove the left and right air tubes.

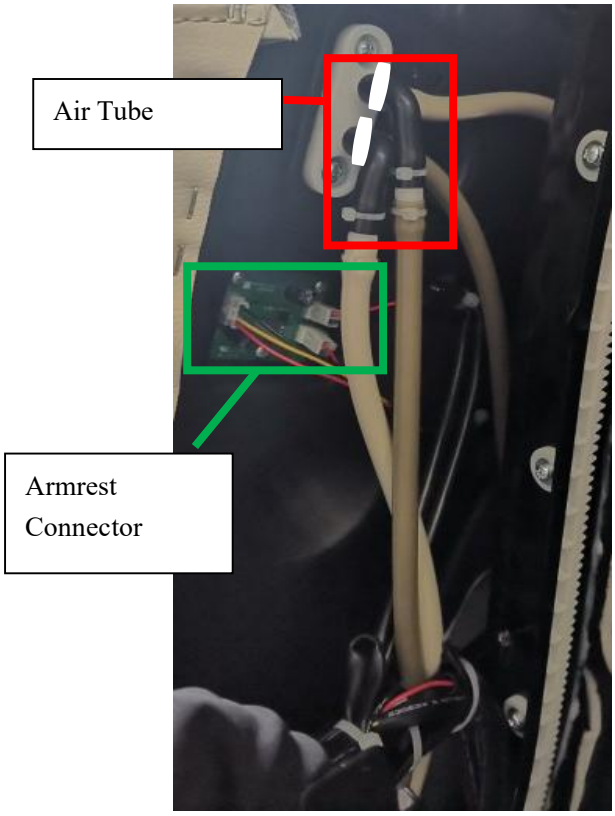

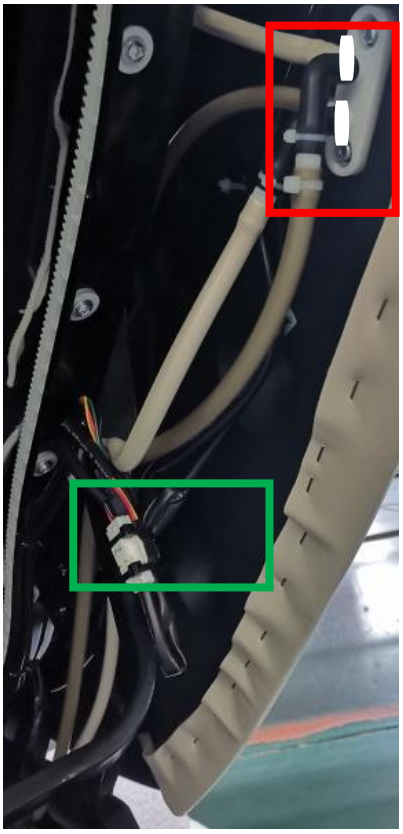

3.2 As shown in the figure, after removing the backrest cover, remove the screws at the connection between the armrest and backrest. Then, at the front position of the massage chair, remove the fixing screws of the armrest. The armrest assembly is disassembled, and according to the internal damage of the armrest assembly, replace the internal components of the armrest.

Remove screw connection back rest and armrest

4. Disassemble massage machine assembly.

4.1Disconnect the massage machine's wiring harness.
4.2 As shown in the figure, use a tool to remove the screws from the guide rail connection plate, remove the guide rail connection plate, and then rotate the lifting motor in the direction of the guide rail to remove the massage machine. Replace the massage machine assembly.

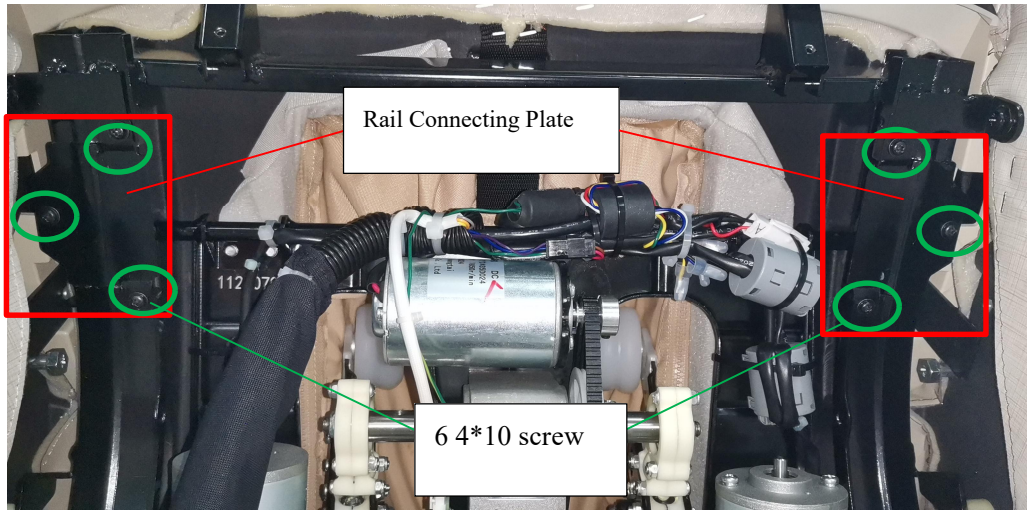

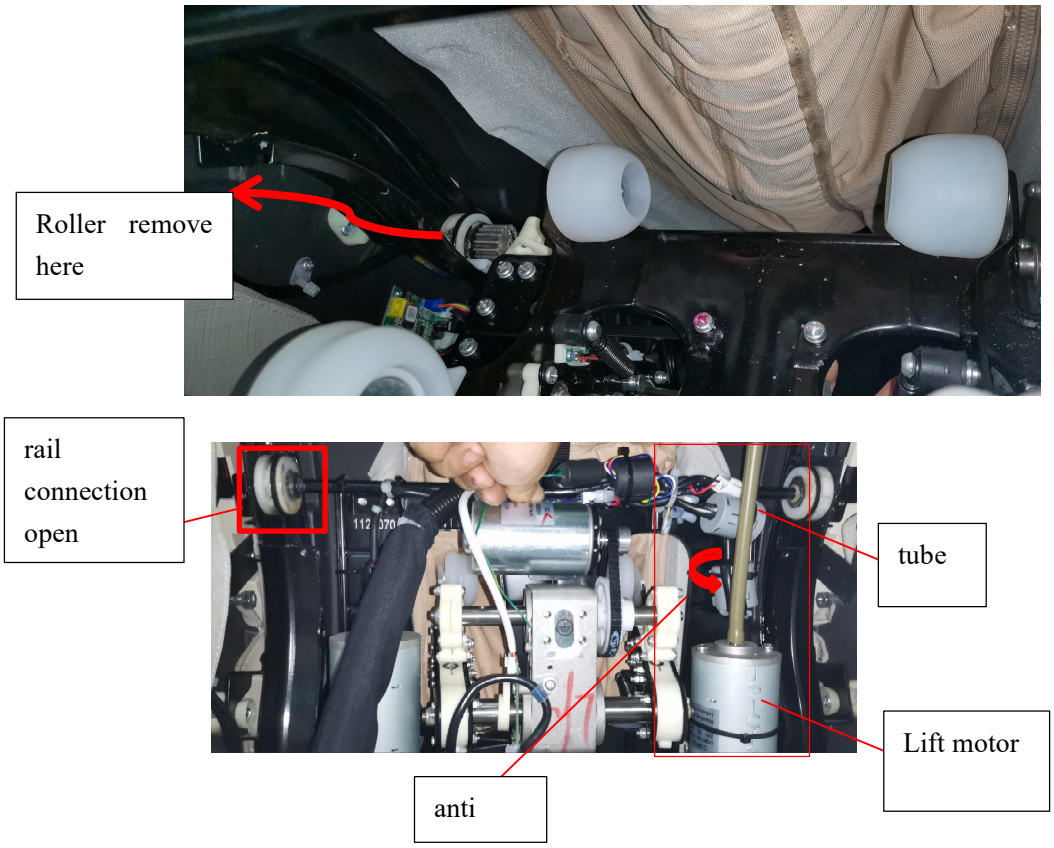

5. Disassemble the power box air pump.

5.1 Disassemble the power box air pump.
Use tools to remove the 2 screws that fix the upper shell of the power box, and then remove the upper shell of the power box.

5.2 Disassembling the air pump:
Use tools to remove the fixing screws of the air pump, then use diagonal pliers to cut off the nylon cable ties, unplug the air pump harness and air tube, and remove the air pump assembly.

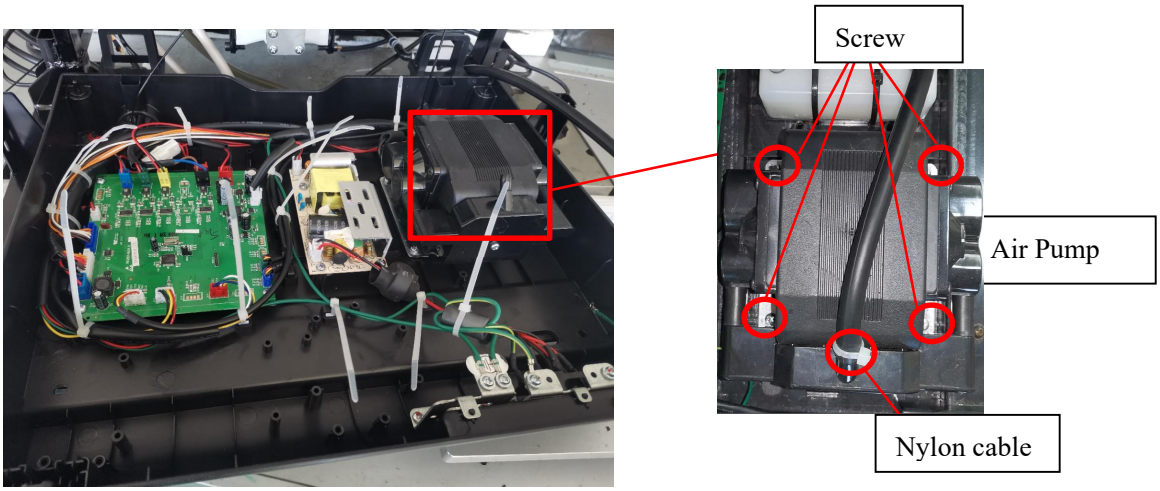

6. Replace solenoid valve

Remove the backrest sewing product assembly, then unzip the backrest front cover (seat position) sewing product, use diagonal pliers to cut off the nylon cable tie connecting the solenoid valve, unplug the connector, and then use tools to remove the solenoid valve assembly and replace it with a new one.

7. Replace Actuator（It need 2 personnel）It need remove footrest first

7.1 Remove seat actuator：

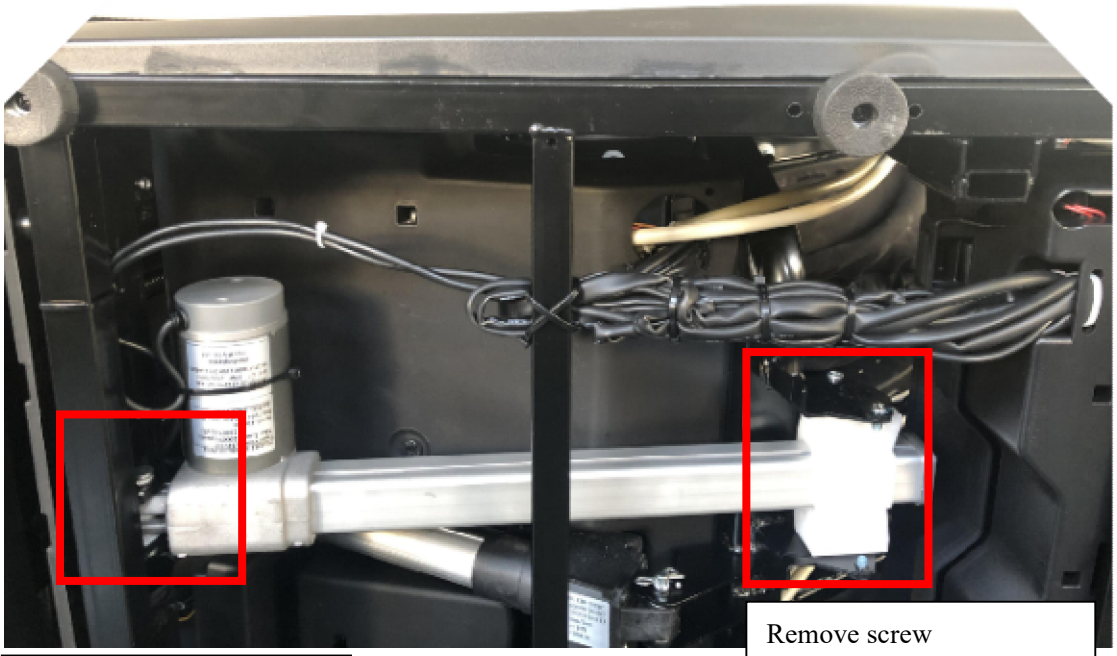

First, gently place the massage chair (with the armrest on the ground) to expose the seat actuator assembly. Gently shake the backrest assembly to remove the fixed support rod spring leaf pin and pin shaft. Then use a tool to remove the other end screw, unplug the connector, and replace the seat actuator assembly.

7.2 Disassembling the leg actuator assembly:

First, gently fold down the massage chair (with the armrest on the ground) to expose the leg Actuator assembly. Gently shake the backrest assembly to remove the pine leaf pin and pin shaft that fix the brace at both ends, unplug the connector, and replace the leg actuator assembly.

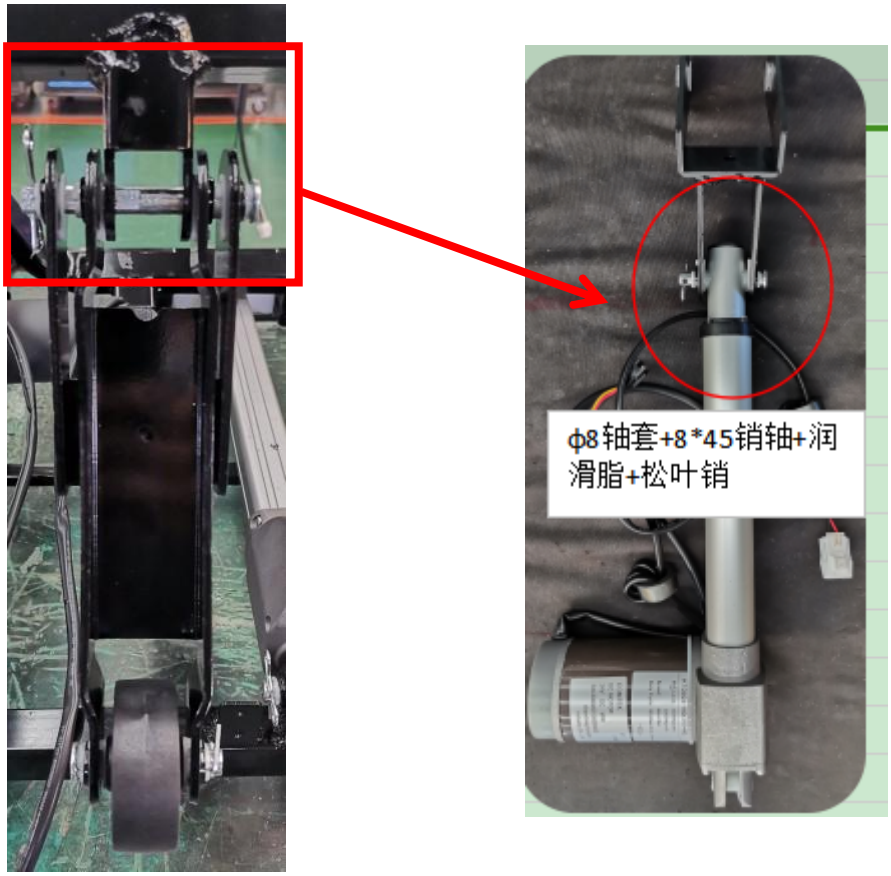

IV Main PCB Board Chart

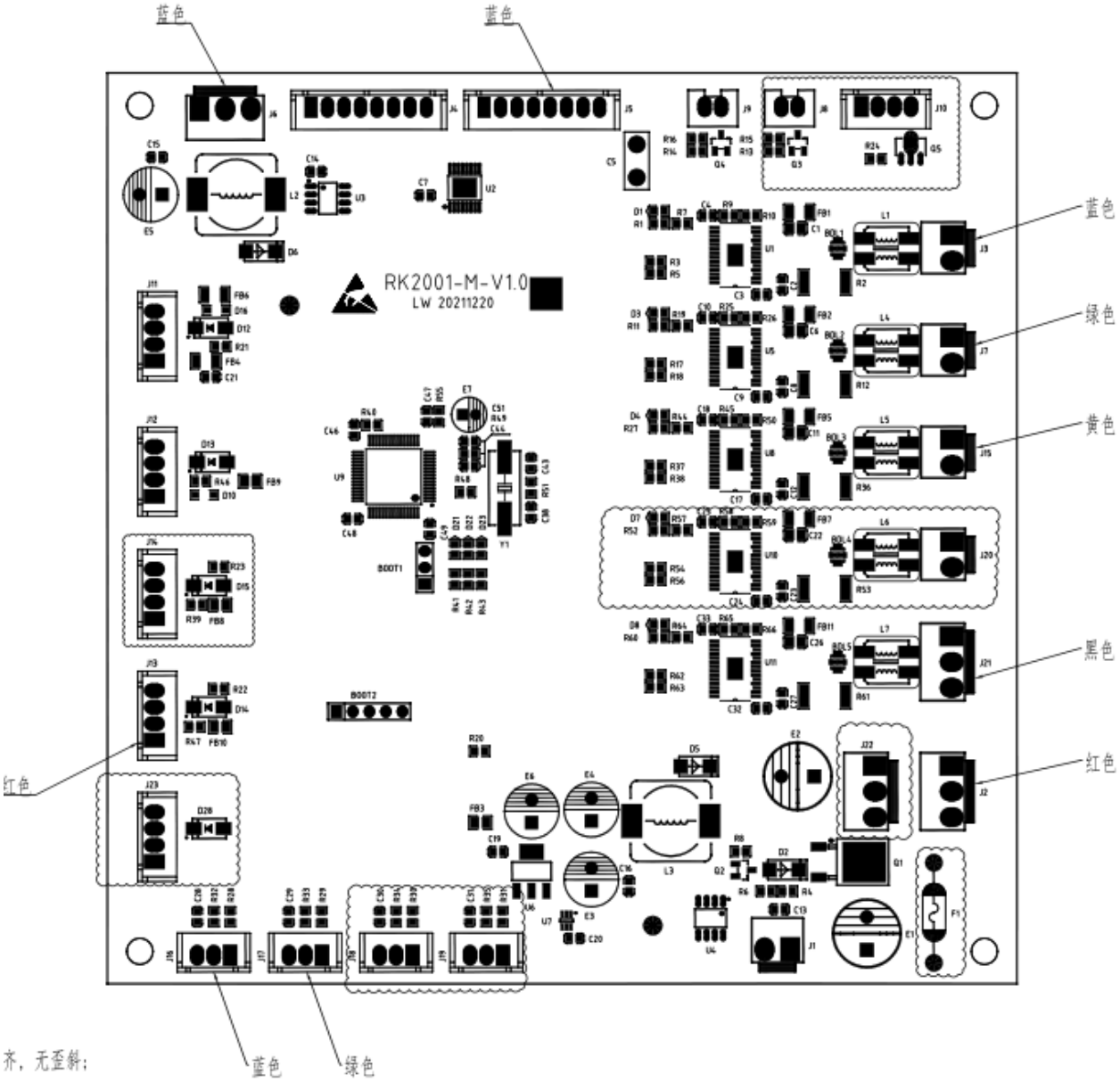

V. System Connection

1. Chair

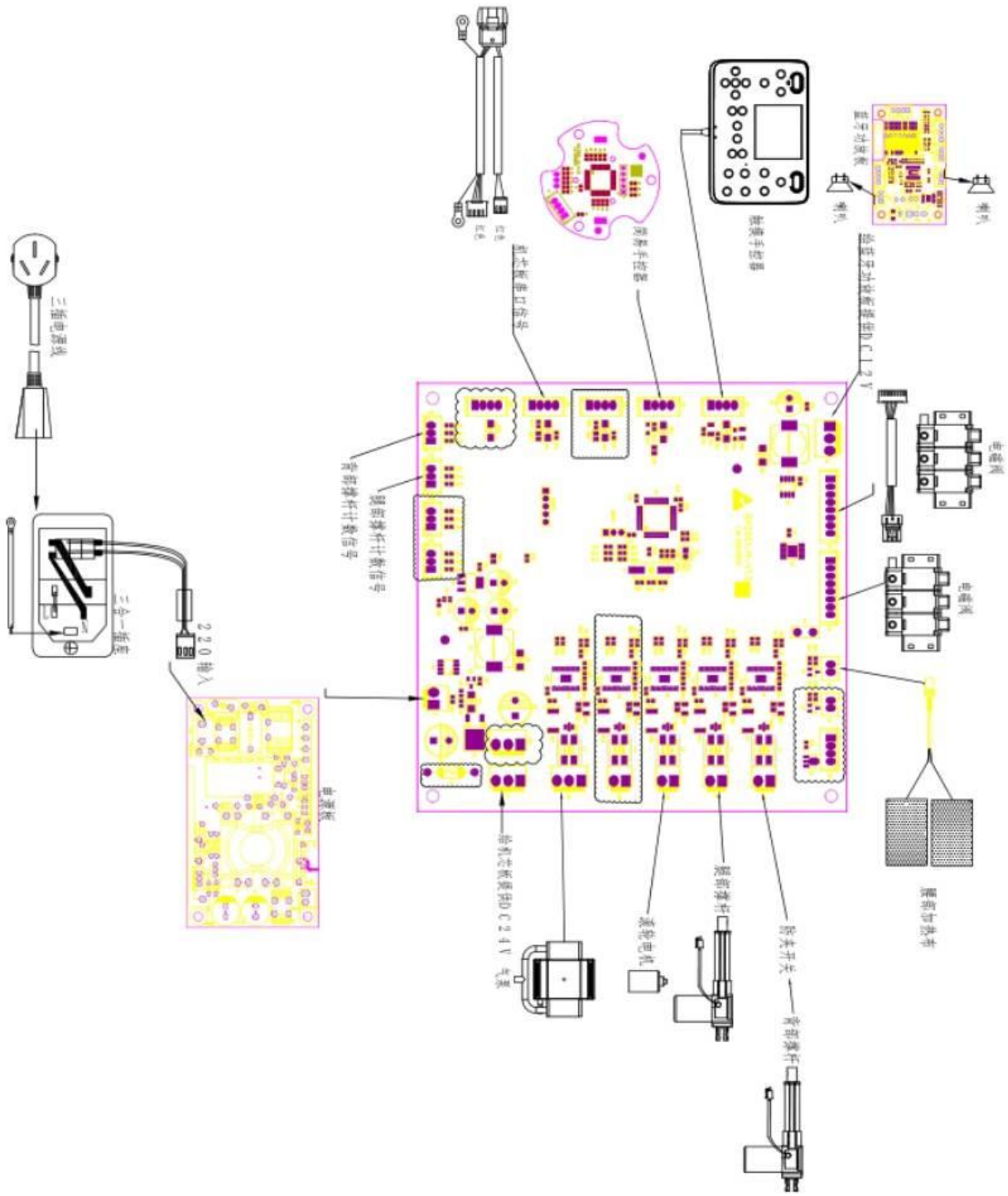

2. Mechanism

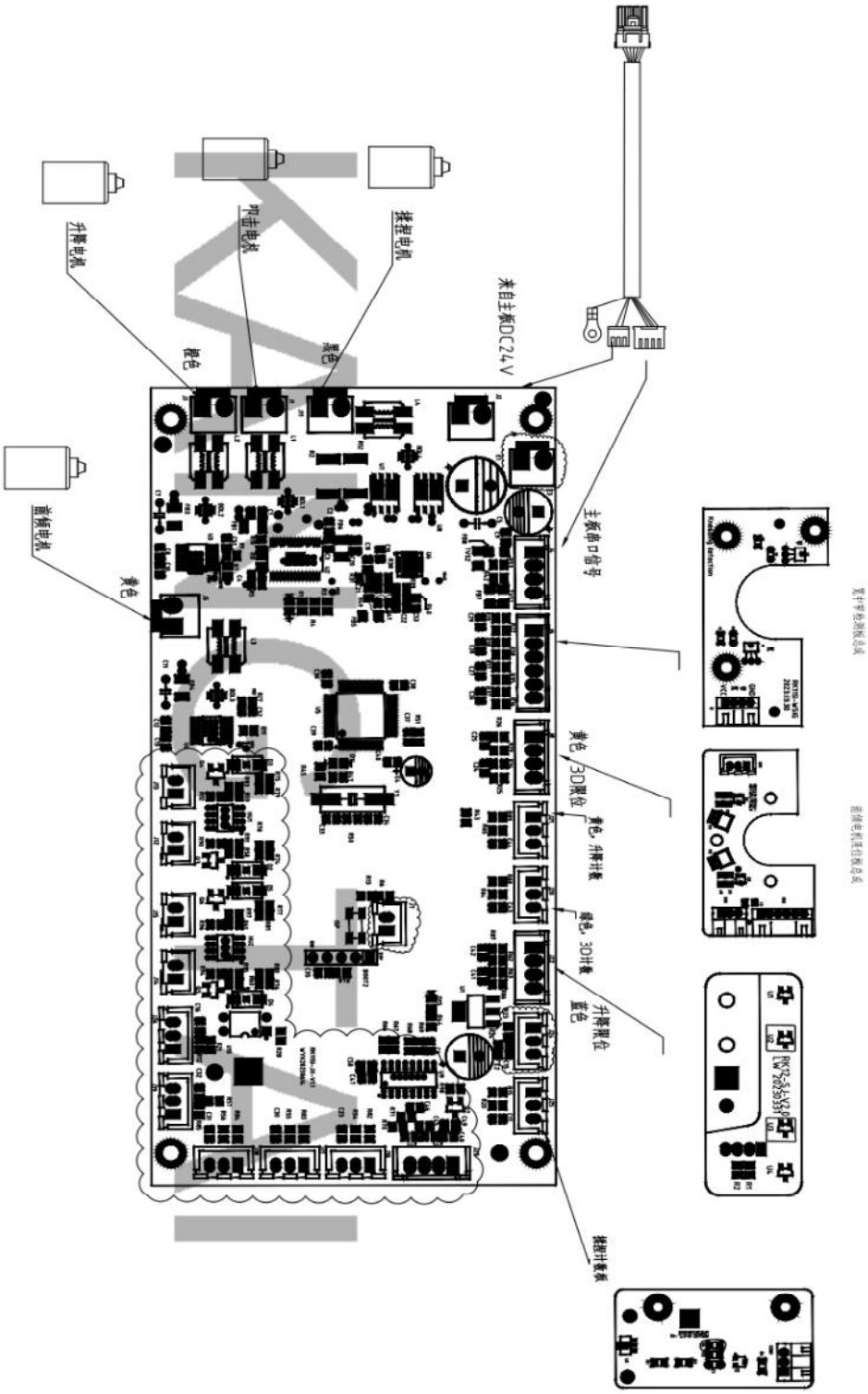
升降电机
冲击电机
摆程电机
来自主板DC24V
橙色
蓝色
重锤电机
黄色
主板串口信号
黄色，3D黑位
黄色，升降计数
绿色，3D计数
升降黑位
蓝色
摆程计数器